LACELA

Product: Die Grinder Art. No. 201005

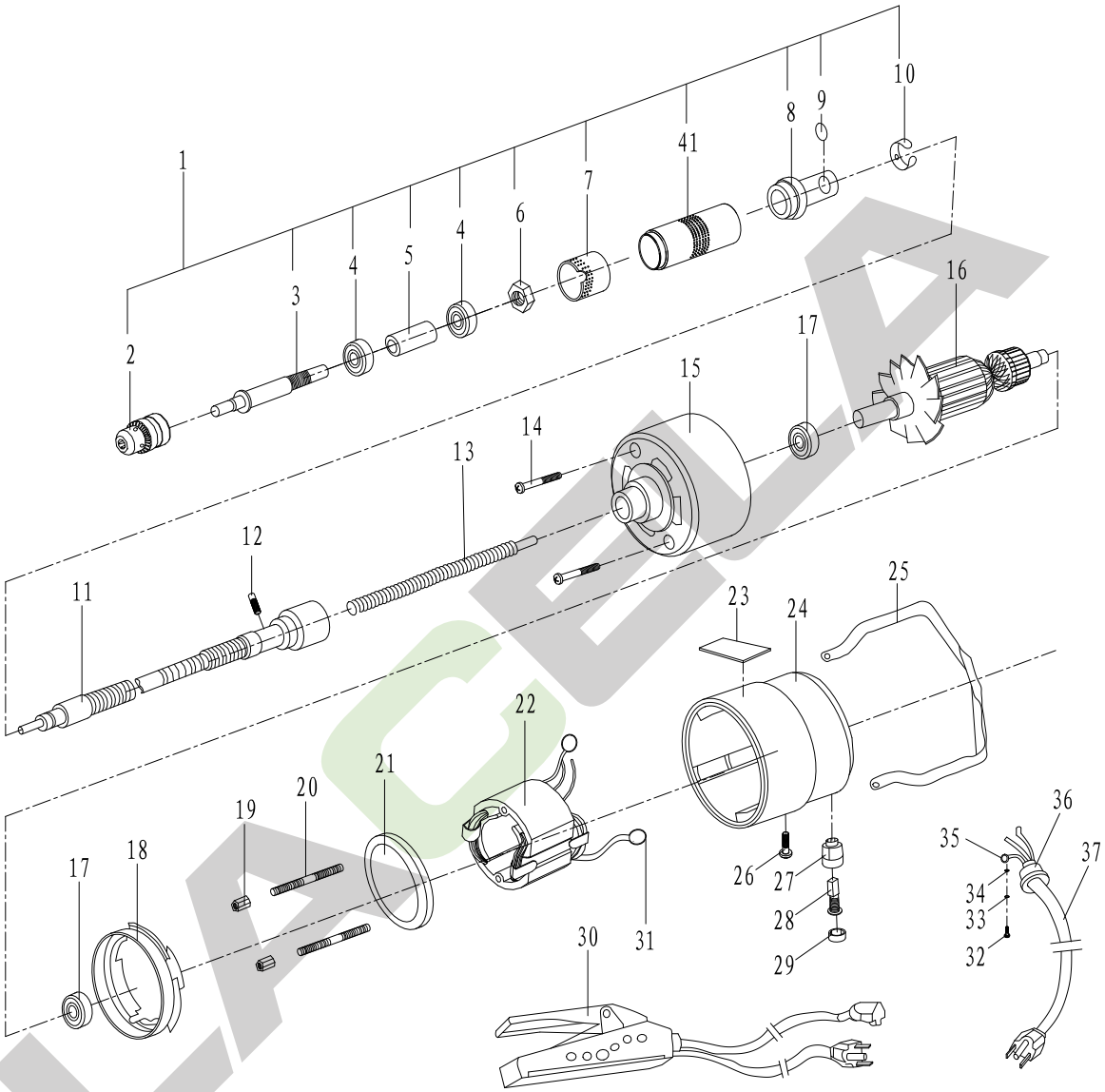

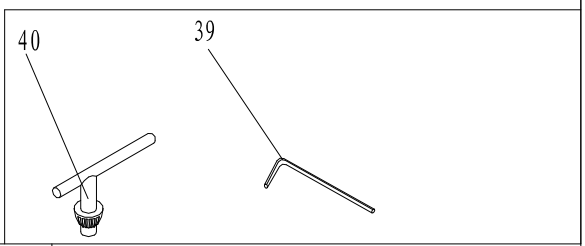

Version No.	D	Enable Time	2022.9

LACELA

Product:Die Grinder Art.No.201005

No.	Part Name(Chinese)	Part Name(English)	Code	Qty	No.	Part Name(Chinese)	Part Name(English)	Code	Qty
1	握持器组件总成	Gripper Assembly	10701015001	1					
2	钻夹头	Drill Chuck	10304001004	1					
3	软轴输出轴	Flexible Shaft Output Spindle	10301009005	1					
4	轴承608	Bearing 608	30104027	2					
5	套管隔套	Casing Spacer	10306002002	1					
6	六角螺母M8×1	Nut M8×1	30501098	1					
7	铝轴管	Alu. Flexible Tube	10301009002	1					
8	下接头	Lower Contact	10306005002	1					
9	钢珠5.5	Steel Ball 5.5	30603008	1					
10	簧片	Reed	10303001003	1					
11	软轴（含上接头）	Flexible Shaft	10301009003	1					
12	内六角紧定螺钉M5×4	Screw M5×4	30203034	3					
13	轴芯	Central Spindle	10301009006	1					
14	沉头螺钉M5×25	Screw M5×25	30201077	2					
15	铝下机壳	Alu.Lower Housing	10202004088	1					
16	转子	Armature	10502001004	1					
17	轴承608	Bearing 608	30103049	2					
18	导风板	Dust Pipe	10101005003	1					
19	六角螺母M5	Nut M5	30501068	2					
20	双头螺柱M5×55	Screw Pin M5×55	30206035	2					
21	挡风圈	Air Deflector	10101005002	1					
22	定子	Stator	10501001004	1					
23	铭牌	Nameplate	20302007474	1					
24	铝上机壳	Alu. Upper Housing	10202004087	1					
25	吊环	Ring	10401008003	1					
26	非标螺钉M5×7	Screw M5×7	30206044	2					
27	刷握	Brush Holder	10606001052	2					
28	碳刷	Carbon Brush	10605001040	2					
29	刷握盖	Brush Holder Cover	10606001053	2					
30	脚踏开关	Switch	10601001240	1					
31	拉簧	Spring	10607001004	2					
32	带平弹垫螺钉M4×8	Screw M4×8	30201039	1					
35	4.2圆插片	Round Insert 4.2	30801018	1					
36	夹紧套	Gripping Sleeve	10102001001	1					
37	电源线3×0.75	Cord 3×0.75	10602005036	1					
39	内六角扳手2	Wrench 2	21201002016	1					
40	夹头钥匙	Chuck Key	10304001005	1					
41	901005持握套	Cripper Sleeve 901005	10306002131	1					
Version No.		D			Enable Time		2022.9		

LACELA